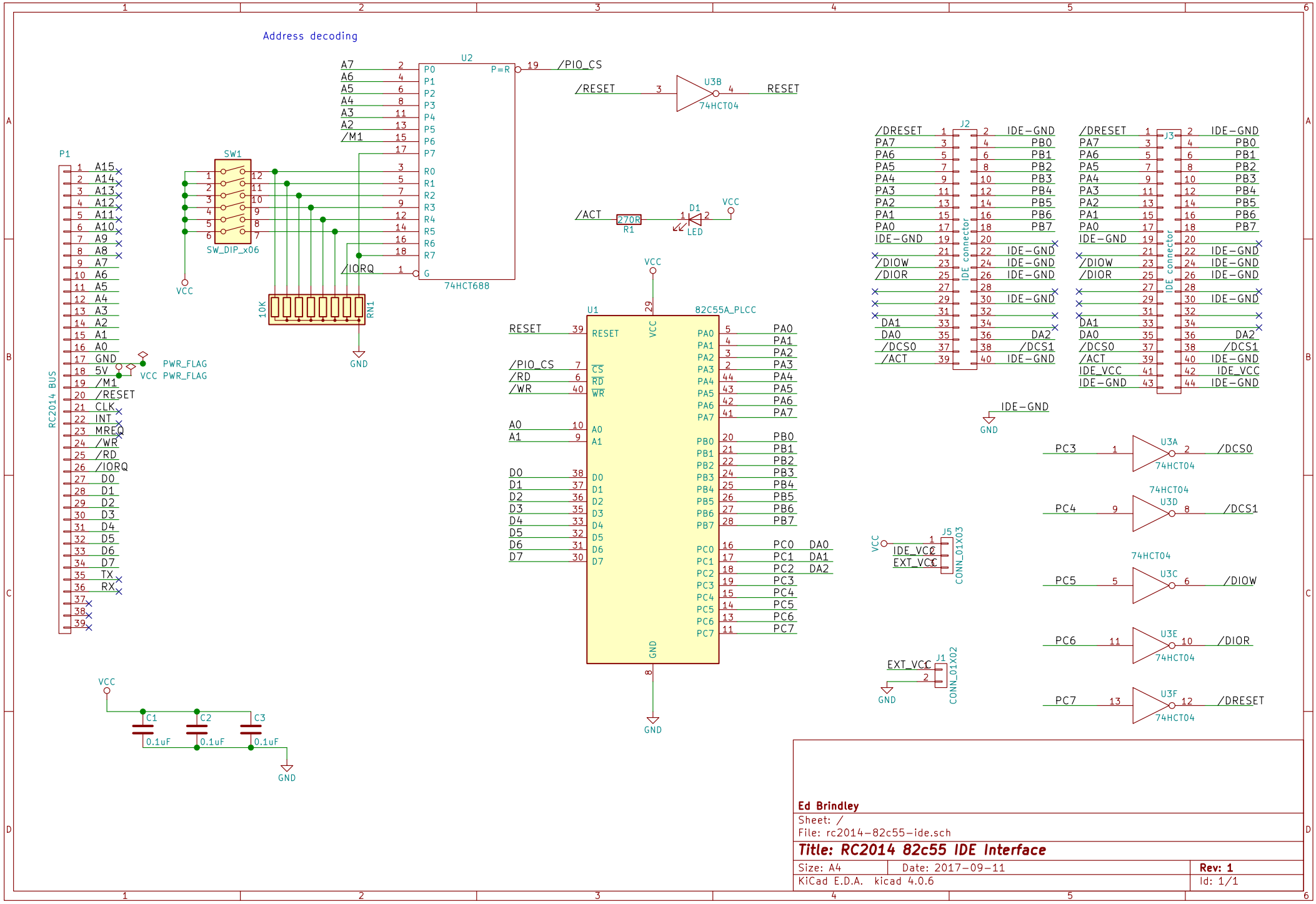

Ed Brindley

Sheet: /

File: rc2014-82c55-ide.sch

Title: RC2014 82c55 IDE Interface

Size: A4	Date: 2017-09-11	Rev: 1
KiCad E.D.A. kicad 4.0.6		Id: 1/1