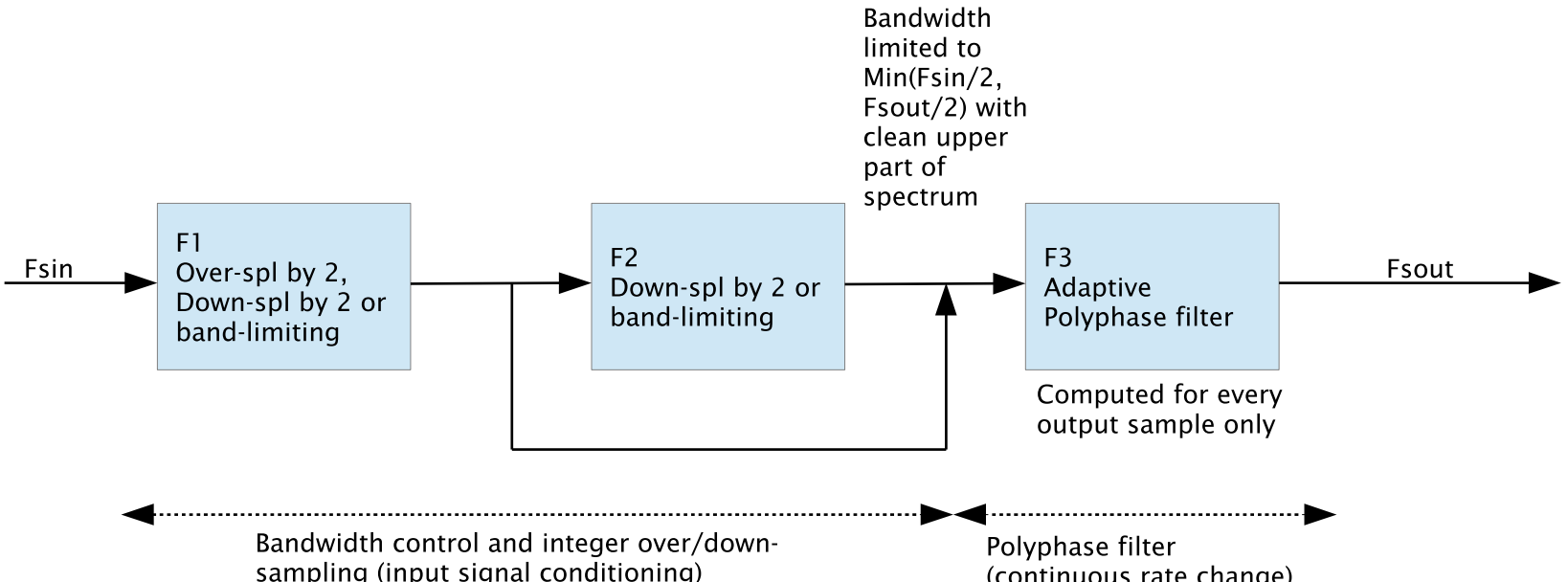
Bandwidth limited to Min(Fsin/2, Fsout/2) with clean upper part of spectrum
Fsin
F1
Over-spl by 2, Down-spl by 2 or band-limiting
F2
Down-spl by 2 or band-limiting
F3
Adaptive Polyphase filter
Fsout
Computed for every output sample only
Bandwidth control and integer over/down-sampling (input signal conditioning)
Polyphase filter (continuous rate change)